150W Single Output Switching Power Supply

LPV-150 series

IP67 (for L type only) IS 15885(Part 2/Sec13) R-41027766 (for LPV-150-12,24 only) (for Blank type only)

Features

- Constant voltage design
- 90~132VAC input for LPVL-150
  180~305VAC input for LPV-150
- Fully encapsulated with IP67 level (Note.8)
- Class Ⅱ power unit, no FG
- Protections: Short circuit/Overload/Over voltage/
  Over temperature
- Fully isolated plastic case
- Fanless design, cooling by free air convection
- 100% full load burn-in test
- Low cost, high reliability
- Listed in UL Sign Component Manual (SAM)
- Type “HL” for use in class I, Division 2 hazardous (Classified) location luminaires for LPVL-150
- 2 years warranty

Applications

- Suitable for LED related fixture or appliance (such as LED Decoration or Advertisement devices)

Description

LPV-150 and LPVL-150 are 150W single output power supplies that specifically and perfectly work for LED lighting and LED moving sign applications. As a class II power unit, these two series are housed with the UL 94V-0 rated flame retardant plastic enclosure. The IP67 design allows every model to fit the use at dry, damp and wet locations. Both series are constant voltage mode design that various models with 12V, 15V, 24V, 36V and 48V are offered for LPV-150 where as 12V and 24V are provided for LPVL-150.

Model Encoding

LPV L - 150 - 12

- 12 — Output voltage
- 150 — Output wattage
- L — Blank: AC input range 180~305VAC; L:AC input range 90~132VAC
- LPV — Series name

SPECIFICATION

MODEL			LPV□-150-12	LPV-150-15	LPV□-150-24	LPV-150-36	LPV-150-48
OUTPUT	DC VOLTAGE		12V	15V	24V	36V	48V
	RATED CURRENT		10A	8A	6.3A	4.2A	3.2A
	CURRENT RANGE		0 ~ 10A	0 ~ 8A	0 ~ 6.3A	0 ~ 4.2A	0 ~ 3.2A
	RATED POWER		120W	120W	151.2W	151.2W	153.6W
	RIPPLE & NOISE (max.) Note.2		200mVp-p	200mVp-p	200mVp-p	200mVp-p	200mVp-p
	VOLTAGE TOLERANCE Note.3		±5.0%				
	LINE REGULATION		±1.0%				
	LOAD REGULATION		±2.0%				
	SETUP, RISE TIME Note.6		LPV-150: 500ms, 50ms / 230VAC 500ms, 50ms / 277VAC; LPVL-150: 1500ms, 50ms / 115VAC				
	HOLD UP TIME (Typ.)		LPV-150: 18ms/230VAC 20ms/277VAC at full load; LPVL-150: 10ms/115VAC at full load				
INPUT	VOLTAGE RANGE Note.4		LPV-150: 180 ~ 305VAC 254 ~ 431VDC; LPVL-150: 90~132VAC				
	FREQUENCY RANGE		47 ~ 63Hz				
	EFFICIENCY (Typ.)		87%	88%	89%	89%	90%
	AC CURRENT		LPV-150: 1.7A/230VAC 1.5A/277VAC; LPVL-150: 3.0A/115VAC				
	INRUSH CURRENT (Typ.)	Blank type	COLD START 60A(twidth=900μs measured at 50% Ipeak) at 230VAC				
		L type	COLD START 75A(twidth=900μs measured at 50% Ipeak) at 115VAC				
	MAX. No. of PSUs on 16A CIRCUIT BREAKER	Blank type	2 units (circuit breaker of type B) / 3 units (circuit breaker of type C) at 230VAC				
		L type	1 units (circuit breaker of type B) / 2 units (circuit breaker of type C) at 115VAC				
	LEAKAGE CURRENT		LPV-150: 0.25mA / 240VAC LPVL-150:0.25mA / 120VAC				
PROTECTION	OVERLOAD		110 ~ 150% rated output power				
			Protection type : Hiccup mode, recovers automatically after fault condition is removed				
	OVER VOLTAGE		13.5 ~ 18V	17 ~ 25V	27 ~ 35V	40 ~ 49V	52 ~ 63V
			Protection type : Shut down o/p voltage, re-power on to recover				
	OVER TEMPERATURE		Shut down o/p voltage, recovers automatically after temperature goes down				
ENVIRONMENT	WORKING TEMP.		-25 ~ +65℃ (Refer to "Derating Curve")				
	WORKING HUMIDITY		20 ~ 90% RH non-condensing				
	STORAGE TEMP., HUMIDITY		-40 ~ +80℃, 10 ~ 95% RH				
	TEMP. COEFFICIENT		±0.03%/℃ (0 ~ 40℃ for LPV-150-12,15 and LPVL-150-12,24;0~50℃ for LPV-150-24,36,48)				
	VIBRATION		10 ~ 500Hz, 2G 10min./1cycle, period for 60min. each along X, Y, Z axes				
SAFETY & EMC	SAFETY STANDARDS	Blank type	UL8750,CSA C22.2 No 250.13-12,UL879,CSA C22.2 No.207-M89,BIS IS15885(for LPV-150-12,24 only),EAC TP TC 004, IP67 approved. Design refer to EN60950-1				
		L type	UL8750(type"HL"),CSA C22.2 No 250.13-12,UL879,CSA C22.2 No.207-M89,IP67 approved				
	WITHSTAND VOLTAGE		I/P-O/P:3KVAC				
	ISOLATION RESISTANCE		I/P-O/P:>100M Ohms / 500VDC / 25℃/ 70% RH				
	EMC EMISSION	Blank type	Compliance to EN55032 (CISPR32) Class B, EN61000-3-2 Class A(≤80% load), EN61000-3-3, EAC TP TC 020				
		L type	Compliance to FCC part 15				
	EMC IMMUNITY	Blank type	Compliance to EN61000-4-2,3,4,5,6,8,11; EN55024, light industry level, criteria A, EAC TP TC 020				
		L type	Design refer to IEC61000-4-2,3,4,5,6,8,11; light industry level, criteria A				
OTHERS	MTBF		703Khrs min. MIL-HDBK-217F (25℃)				
	DIMENSION		191*63*37.5mm (L*W*H)				
	PACKING		LPV-150: 0.74Kg;20pcs/15.8Kg/0.95CUFT; LPVL-150: 0.85Kg;20pcs/17Kg/0.95CUFT				

NOTE

1. All parameters NOT specially mentioned are measured at 230VAC(115VAC for LPVL) input, rated load and 25℃ of ambient temperature.
2. Ripple & noise are measured at 20MHz of bandwidth by using a 12" twisted pair-wire terminated with a 0.1uf & 47uf parallel capacitor.
3. Tolerance : includes set up tolerance, line regulation and load regulation.
4. Derating may be needed under low input voltage. Please check the static characteristics for more details.
5. The power supply is considered as a component that will be operated in combination with final equipment. Since EMC performance will be affected by the complete installation, the final equipment manufacturers must re-qualify EMC Directive on the complete installation again.
6. Length of set up time is measured at first cold start. Turning ON/OFF the power supply may lead to increase of the set up time.
7. The unit might not be suitable for lighting applications in EU countries. Please check with your local authorities for the possible use of the unit.
8. Suitable for indoor use or outdoor use without direct sunlight exposure.
9. The ambient temperature derating of 3.5℃/1000m with fanless models and of 5℃/1000m with fan models for operating altitude higher than 2000m(6500ft).
10. For any application note and IP water proof function installation caution, please refer our user manual before using.
    https://www.meanwell.com/Upload/PDF/LED_EN.pdf

■ Mechanical Specification

Case No. LPC-150 Unit:mm

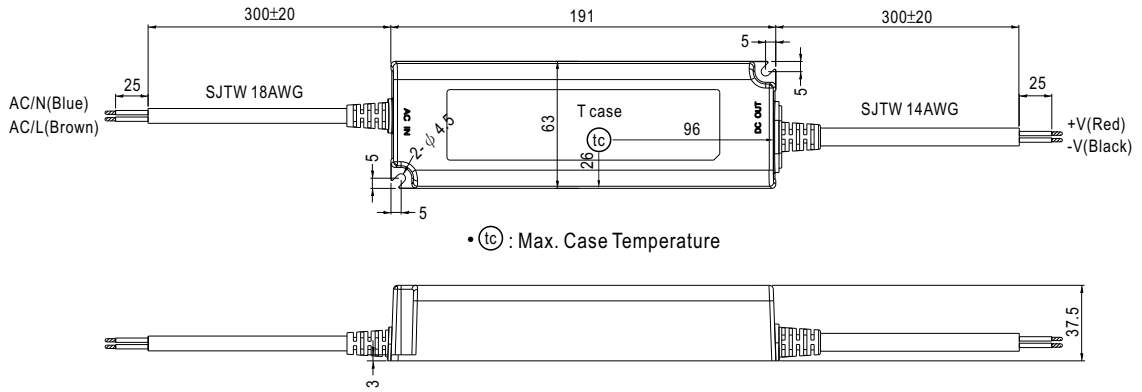

• tc : Max. Case Temperature

■ Recommend Mounting Direction

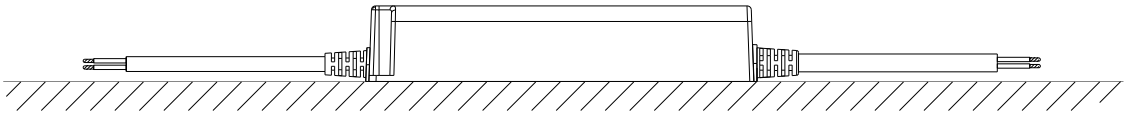

■ Block Diagram

PWM fosc : 47KHz

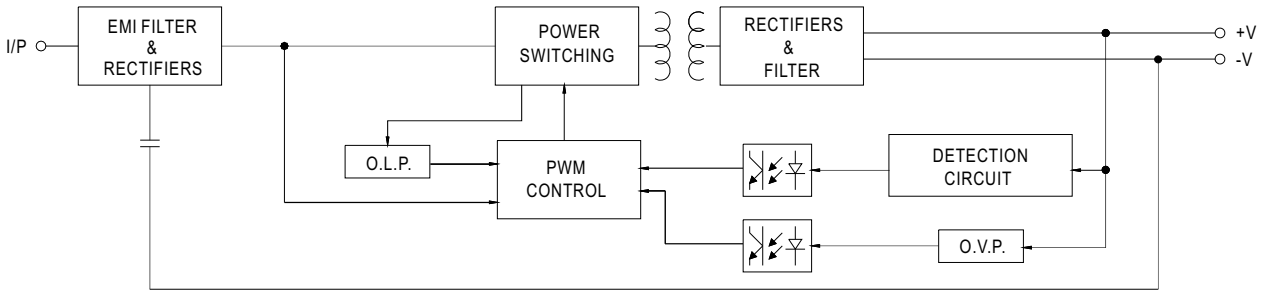

■ Derating Curve

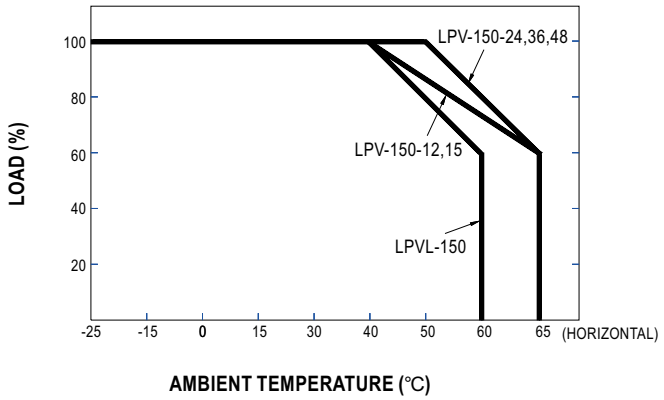
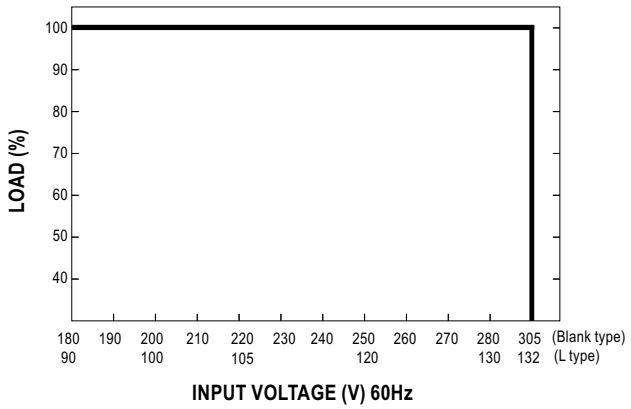
■ Static Characteristics